The copy filmed here has been reproduced thanks to the generosity of:

Library of the National Archives of Canada

The images appearing here are the best quality possible considering the condition and legibility of the original copy and in keeping with the filming contract specifications.

Original copies in printed paper covers are filmed beginning with the front cover and ending on the last page with a printed or illustrated impression, or the back cover when appropriate. All other original copies are filmed beginning on the first page with a printed or illustrated impression, and ending on the last page with a printed or illustrated impression.

The last recorded frame on each microfiche shall contain the symbol ⟶ (meaning "CONTINUED"), or the symbol ▽ (meaning "END"), whichever applies.

Maps, plates, charts, etc., may be filmed at different reduction ratios. Those too large to be entirely included in one exposure are filmed beginning in the upper left hand corner, left to right and top to bottom, as many frames as required. The following diagrams illustrate the method:

L'exemplaire filmé fut reproduit grâce à la générosité de:

La bibliothèque des Archives nationales du Canada

Les images suivantes ont été reproduites avec le plus grand soin, compte tenu de la condition et de la netteté de l'exemplaire filmé, et en conformité avec les conditions du contrat de filmage.

Les exemplaires originaux dont la couverture en papier est imprimée sont filmés en commençant par le premier plat et en terminant soit par la dernière page qui comporte une empreinte d'impression ou d'illustration, soit par le second plat, selon le cas. Tous les autres exemplaires originaux sont filmés en commençant par la première page qui comporte une empreinte d'impression ou d'illustration et en terminant par la dernière page qui comporte une telle empreinte.

Un des symboles suivants apparaîtra sur la dernière image de chaque microfiche, selon le cas: le symbole ⟶ signifie "A SUIVRE", le symbole ▽ signifie "FIN".

Les cartes, planches, tableaux, etc., peuvent être filmés à des taux de réduction différents. Lorsque le document est trop grand pour être reproduit en un seul cliché, il est filmé à partir de l'angle supérieur gauche, de gauche à droite, et de haut en bas, en prenant le nombre d'images nécessaire. Les diagrammes suivants illustrent la méthode.

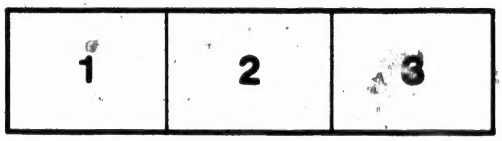

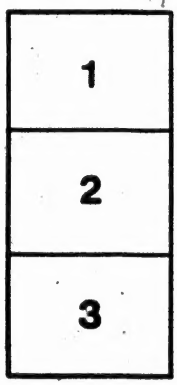

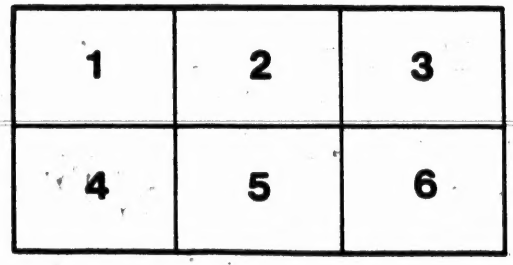

RULES, REGULATIONS AND FORMS

OF THE

CANADIAN PATENT OFFICE.

JUNE, 1883.

CA

William Norris
1885

RULES, REGULATIONS AND FORMS

OF THE

CANADIAN PATENT OFFICE.

JUNE, 1883.

PRINTED BY MACLEAN, ROGER & CO., WELLINGTON STREET, OTTAWA.

RULES, REGULATIONS AND FORMS

OF THE

CANADIAN PATENT OFFICE,

JUNE, 1883.

GENERAL RULES.

1. A personal appearance of the applicant or his representative at the Patent Office is not required, unless specially called for by the Commissioner or Deputy Commissioner.

2. In all cases the applicant or depositor of any paper is responsible for the merits of his allegations and the validity of the instruments furnished by him or his agent.

3. Correspondence may be carried on either with the applicant, or his agent, but only with one person.

4. All documents must be legibly and neatly written or printed on foolscap paper (13 inches long and 8 wide), with an inner margin of one inch and a half wide.

5. All Communications are to be addressed:—"*The Commissioner of Patents, Ottawa, Canada.*"

6. As regards proceedings not specially provided for in the accompanying forms, any other form being conformable to the letter and spirit of the law may be accepted and if not conformable therewith will be returned for correction.

7. Models must be neat and substantial working ones, not exceeding 12 inches on the longest side, unless otherwise allowed by special permission; models must be so constructed as to show exactly every part of the inven-

tion claimed and its mode of working. In cases where samples of ingredients are required by law, they must be contained in glass bottles properly arranged, but dangerous or explosive substances must not be sent. Both models and bottles must bear the name of the inventor, the title of the invention and the date of the application; they must be furnished to the Patent Office free of charge and in good order.

8. All fees required by law should be transmitted with the application for any action by the office, in current bankable funds, enclosed in registered letters. Bank Drafts and Cheques or Money Orders should be made payable to "The Commissioner of Patents, Ottawa." *In no case should money be enclosed with models.*

9. An application for a Patent must be proceeded with and perfected within two years after the lodging of the petition, in default of which it will be regarded as abandoned; and all previous proceedings and payment of fees will be held at the expiration of that period to be of no avail.

10. Two or more separate inventions cannot be claimed in one application, or patented in one Patent. But if separate matters are represented to be so dependent on, and connected with each other as to be necessarily taken together, to obtain the end sought for by the inventor, the Commissioner of Patents shall be the judge whether or not the pretensions of the applicant in such respect can be entertained.

11. The filing of a protest against the issuing of a Patent shall not be taken in itself as sufficient reason to withhold the granting of such Patent to an applicant.

12. A *Caveat* can only be filed by an inventor and shall be composed of a specification (*and drawings*), certified on oath [Form No. 23] and the applicant may lodge with it additional papers during its currency, provided they are relevant exclusively to the same invention. The person filing a *Caveat* will not be entitled to notice of any application pending at the time of filing his *Caveat*. A *Caveat* must be limited to a single invention.

13. Drawings in duplicate to be attached to the duplicate specification must be made on sheets of tracing linen (eight by thirteen inches), neatly executed and without colours. (Form 14).

With each application an extra drawing is required for the Patent Office Record, on a sheet of Bristol Board 8 by 13 inches, without writing

on its face, merely the usual lettering; no title, certificate, nor signatures; on the back of the sheet the name of inventor and invention to be written in pencil.

Where several figures are furnished, any one figure which will best give a general idea of the invention will be sufficient.

The card board to be used must have a smooth or calendered surface—a sheet of "double thick Bristol Board," or "Whatman's drawing paper," is recommended.

All drawings must be clear, sharp, well defined, not too fine, and *perfectly black.*

Lines that are pale, ashy, very fine, ragged or rotten, give bad results when photo-lithographed.

Brush-shading, tinting, and imitation surface graining should never be used; and in fine shading the result should be attained with as few lines as possible.

Section lines also should be as open in their spacing as the case will admit of, and these, as well as all right lines, in order to insure clearness, should be made with a ruling pen. The shading of convex and concave surfaces may be dispensed with when the invention is otherwise well illustrated.

Shade lines may some times be used with good effect, but heavy shadows where they would obscure lines or letters of reference, should be avoided.

The card board drawing should be rolled on a roller for transmission to the office, as folding will prevent its usefulness for photo-lithographing.

A sample card board drawing will be furnished on application.

14. In the matter of a re-issue, under Section 19 of the Act, whatever is really embraced in the original application and so described or shown in the same, that it might have been embraced in the original Patent, may be ground for a re-issue. No new matter can be introduced into the specifications, nor shall the model or drawings be amended except each by the other. In the absence of model or drawing, the re-issue may contain amendments, upon satisfactory proof to the Commissioner that such amendmends were part of the invention, although omitted in the original application. Separate patents may be issued for each separate and distinct part of the invention, comprehended in the original patent.

15. Information in relation to pending cases will be furnished only so far as it becomes necessary in conducting the business of the office.

16. The office cannot respond to inquiries as to the probability of an alleged invention being patented in advance of an application for a Patent; nor to inquiries founded on brief or imperfect descriptions, propounded with a view of ascertaining whether alleged improvements have been patented, and, if so, by whom; nor can it act as an expounder of the Patent Law, nor as councillor for individuals, except as to questions within the office.

17. All business with this Office should be transcaced in w iting. The action of the Office will be based exclusively on the written record. No attention will be paid to any alleged verbal promise or understanding in relation to which there is any disagreement or doubt.

18. Assignments of patents are to be accompanied by a copy thereof; such copy will be kept in the Patent Office, and the original will be returned to the person sending it, with certificate of registration thereon.

19. All cases connected with the intricate and multifarious proceedings arising from the working of the Patent Office, which are not specially defined and provided for in these Rules, will be decided in accordance with the merits of each case under the authority of the Commissioner; and such decision will be communicated to the interested parties in writing.

NOTICE.

I. Correspondence with the Department is carried through the Canadian Mail, free of postage.

II. Papers forwarded to the Office should be accompanied by a letter, and a separate letter should be written on every subject.

III. In order to avoid unnecessary explanations and useless loss of time and labor, it is particularly recommended that reference be made to the law before writing on any subject to the Patent Office; and it is also recommended, in every case, to have the papers and drawings prepared by competent persons, in the interest both of the applicant and of the public service.

IV. The specification of a *Caveat* should be sufficiently precise to enable the Office to judge whether there is a probable interference when a sub-

equent application is filed, and it is important, in the interest of the Caveator, always to attach drawings to such specification.

V. It is in the interest of the applicant that the greatest possible care should be taken with the papers, as dispatch and regularity in the proceedings are thereby promoted.

VI. A copy of the rules with a particular section marked, sent to any person making an enquiry, is intended as a respectful answer by the Office.

APPENDIX OF FORMS.

PETITIONS.

1. By a sole inventor.

To the Commissioner of Patents, Ottawa:

The petition of John Smith, of the City of Toronto, in the Province of Ontario, carpenter, sheweth:

That he hath invented new and useful improvements in Machines for Breaking Stones, not known or used by others before his invention thereof, and not being in public use or on sale, for more than one year previous to his application, in Canada, with his consent or allowance as such inventor.

Your petitioner therefore prays that a Patent may be granted to him for the said invention, as set forth in the specification in duplicate sent herewith, and, for the purposes of the Patent Act of 1872, your petitioner elects his domicile in the City of Ottawa, Province of Ontario.

JOHN SMITH.

Toronto, 1st September, 1882.

2. By joint inventors.

To the Commissioner of Patents, Ottawa:

The Petition of James Thomas, blacksmith, and George Robert Major, tinsmith, both of the City of Ottawa, in the County of Carleton, in the Province of Ontario, sheweth:

That they have jointly invented a new and useful improvement in the art or process of separating smut from wheat, not known or used by others before their invention thereof, and not being in public use or on sale, for more than one year previous to their application, in Canada, with their consent or allowance as such inventors.

Your petitioners therefore pray that a patent may be granted to them jointly for the said invention as set forth in the specification in duplicate sent herewith, and, for the purposes of the Patent Act of 1872, your petitioners elect their domicile in the City of Ottawa, Province of Ontario.

JAMES THOMAS.
GEORGE ROBERT MAJOR.

OTTAWA, 1st September, 1882.

3. BY AN ASSIGNEE, OR LEGATEE "MUTATIS MUTANDIS."

To the Commissioner of Patents' Ottawa:

The Petition of Solomon Lang, of the City of Boston, State of Massachusetts, one of the United States of America, Labourer, sheweth:

That Thomas Tardy, of the City of Ottawa, Province of Ontario, saloon keeper, hath invented new and useful improvements in planing machines not known or used by others before his invention thereof, and not being in public use or on sale, for more than one year previous to this application, in Canada, with the consent or allowance of the said Thomas Tardy as such inventor.

That your petitioner, by assignment bearing date 1st September, 1882, acquired the right of obtaining a patent from Thomas Tardy aforesaid, for the said invention.

Your petitioner therefore prays that a patent may be granted to him, as the assignee of the said Thomas Tardy, for the said invention as set forth in the specification in duplicate sent herewith, and, for the purposes of the Patent Act of 1872, your petitioner elects his domicile in the City of Ottawa, Province of Ontario.

NEW YORK, 1st September, 1882.

SOLOMON LANG.

4. By an inventor and an assignee.

To the Commissioner of Patents, Ottawa:

The Petition of John Smith, of the City of Toronto, in the Province of Ontario, carpenter, and David Brown, of the City of New York, in the State of New York, one of the United States of America, painter, sheweth:

That the said John Smith hath invented new and useful improvements in machines for breaking stone, not known or used by others before his invention thereof, and not being in public use or on sale, for more than one year previous to this application, in Canada, with his consent or allowance as such inventor.

That by assignment, dated on the 1st September, 1882, the said John Smith transferred to the said David Brown, an undivided one-half interest in the said invention.

Your petitioners therefore pray that a Patent may be granted to them jointly for the said invention as set forth in the specification in duplicate sent herewith, and, for the purposes of the Patent Act of 1872, your petitioners elect their domicile in the City of Toronto, Province of Ontario.

JOHN SMITH.
DAVID BROWN.

Toronto, 1st September, 1882.

5. By an administrator or executor.

To the Commissioner of Patents, Ottawa:

The petition of James Clayton, of the City of Kingston, in the Province of Ontario, stone-cutter, administrator of the estate (or executor of the last will and testament) of Thomas Clayton, in his lifetime, of the said City of Kingston, deceased, millwright, (as reference to the duly certified copy of letters of administration (or letters testamentary) hereto annexed, will more fully appear), sheweth:

That the said Thomas Clayton did invent a new and useful composition of matter for making artificial stone, not known or used by others before his invention thereof, and not being in public use or on sale, for more than one year previous to this application, in Canada, with the consent or allowance of the said Thomas Clayton as such inventor.

Your petitioner therefore prays that a patent may be granted to him as administrator (or executor) of the estate of the said Thomas Clayton for the said invention, as set forth in the specification in duplicate sent herewith, and, for the purposes of the Patent Act of 1872, your petitioner elects his domicile in the City of Ottawa, Province of Ontario.

KINGSTON, 1st September, 1882. JAMES CLAYTON.

6. FOR A RE-ISSUE (BY THE INVENTOR.)

To the Commissioner of Patents, Ottawa:

The petition of Thomas Brown, of the City of Ottawa, in the Province of Ontario, lumber manufacturer, sheweth:

That your petitioner obtained a Patent bearing date the twelfth day of August, A.D., 1870, for a new and useful improvement in churns.

That your petitioner is advised that the said Patent is deemed defective or inoperative by reason of insufficient description or specification, and that the errors arose from inadvertence, accident or mistake, without any fraudulent or deception intention.

Your petitioner being desirous of obtaining a new Patent in accordance with an amended description and specification in duplicate, transmitted herewith, therefore prays that he may be allowed to surrender the aforesaid Patent, and a new Patent be granted to him, in accordance with the amended description and specification of the said invention, for the unexpired period for which the original patent was granted.

OTTAWA, 1st September, 1882. THOMAS BROWN.

7. FOR A RE-ISSUE (BY THE ASSIGNEE.)

To the Commissioner of Patents, Ottawa:

The petition of David Lane, of the town of Cobourg, in the County of Northumberland, Province of Ontario, tanner, sheweth:

That your petitioner, by assignment, bearing date the 24th day of June, 1882, obtained the exclusive right to a Patent granted to Thomas Tardy, of the City of Ottawa, Province of Ontario, broom maker, on the 1st of July, 1879, for new and useful improvements in planing machines.

That your petitioner is advised that the said Patent is deemed defective or inoperative by reason of insufficient description or specification, and that the error arose from inadvertence, accident or mistake, without any fraudulent or deceptive intention.

Your petitioner being desirous of obtaining a new Patent in accordance with an amended description and specification in duplicate, transmitted herewith, therefore prays that he may be allowed to surrender the aforesaid Patent, and a new Patent be granted to him, as assignee of the said Thomas Tardy, in accordance with the amended description and specification of the said invention, for the unexpired period for which the original Patent was granted.

DAVID LANE.

Cobourg, 1st September, 1882.

The above form is to be altered to suit the case, when the re-issue is to the administrator or executor of a deceased inventor.

8. Form of surrender to be written on the original patent.

To all to whom these presents shall come, Thomas Brown, of the City of Ottawa, in the Province of Ontario, lumber manufacturer, within named, sends greeting:—

Whereas the within written Patent, for an improvement in churns, is deemed defective or inoperative by reason of insufficient description or specification, and the error arose from inadvertence, accident or mistake, without any fraudulent or deceptive intention, and the Commissioner of Patents accordingly, in pursuance of the Statute in such respect, hath agreed to accept the surrender of the same.

Now know ye that the said Thomas Brown within named, doth, by these presents, surrender and yield up the within written Patent, granted to him, for improvements in churns, and bearing date the 8th day of June, 1882.

In witness whereof the said Thomas Brown hath set his hand and affixed his Seal this first day of September, A.D., 1882.

THOMAS BROWN. [L.S.]

Signed, sealed and delivered at the City of Ottawa, in the County of Carleton, in the Province of Ontario, in the presence of

HENRY COCKBURN.

9. FOR THE CERTIFICATE OF PAYMENT OF FEE FOR FURTHER TERM. (INVENTOR).

To the Commissioner of Patents, Ottawa:

The petition of Martin Scott, of the City of Montreal, in the Province of Quebec, cooper, sheweth:

That on the 23rd June, 1878, your petitioner obtained a Patent for new and useful improvements in churns on which the partial fee for five (or ten) years was paid.

That he is the holder of the said Patent, and therefore prays that the usual certificate of payment of fee for a second (or *third*) term may be attached thereto.

Signed this first day of September, 1882.

MARTIN SCOTT.

10. FOR THE CERTIFICATE OF PAYMENT OF FEE FOR FURTHER TERM. (ASSIGNEE).

To the Commissioner of Patents, Ottawa:

The petition of Simon Smith, of the City of Halifax, in the Province of Nova Scotia, mariner, sheweth:

That by assignment, dated 1st July, 1881, he obtained from John Brown, of the Village of Bridgetown, in the County of Annapolis, in the Province of Nova Scotia, stone-mason, the exclusive right to a Patent granted on the 29th June, 1880, to the said John Brown, for new and useful improvements in ploughs, on which the partial fee for five (or ten) years was paid.

That your petitioner being the holder of the said Patent, therefore prays that the usual certificate of payment of fee for a second (or *third*) term may be attached thereto.

Signed this first day of September, 1882.

SIMON SMITH.

11. POWER OF ATTORNEY.

To the Commissioner of Patents, Ottawa:

The undersigned, John Brown, of the Town of Cornwall, in the County of Stormont, in the Province of Ontario, store-keeper, hereby appoints

John Smith, of the City of Ottawa, Province of Ontario, his attorney, with full power of substitution and revocation, to prosecute an application for new and useful improvements in sewing machines; to sign the drawings, to receive the Patent, and to transact all business in the Patent Office connected therewith.

Signed at Cornwall, this first day of September, 1882.

In the presence of JOHN BROWN.

JOHN SMITH.

12. REVOCATION OF POWER OF ATTORNEY.

To the Commissioner of Patents, Ottawa:

The undersigned, John Brown, of the Town of Cornwall, in the County of Stormont, in the Province of Ontario, store-keeper, having on or about the 1st September, 1882, appointed John Smith, of the City of Ottawa, Province of Ontario, his attorney, to prosecute an application for a Patent for new and useful improvements in sewing machines, hereby revokes the power of attorney then given.

Signed at Cornwall, this thirteenth day of September, 1882.

In the presence of JOHN BROWN.

JOHN SMITH.

SPECIFICATIONS.

(*To be in Duplicate.*)

13. FOR A MACHINE.

To all whom it may concern:

Be it known that I, William Woodworth, of the Town of Poughkeepsie, in the County of Dutchess, in the State of New York, gentleman, have invented certain new and useful improvements in planing machines, and I do hereby declare that the following is a full, clear and exact description of the same.

Reference being made to the accompanying drawing in which:

Figure 1 is a side elevation of a machine embodying my invention.

Figure 2 is a plan of the same.

Figure 3 is an elevation showing the end of the machine which is at the right hand in Figure 1.

Figure 4 is a vertical transverse section, showing those parts of the machine which are at the right hand of the line *x x* drawn across figures 1 and 2.

The first part of my invention relates to the combination of rotary cutters and feeding-rollers, in such a manner that the said feeding-rollers shall be capable of feeding the lumber to the cutters, and also of effectually resisting the tendency of the cutters to draw the lumber upwards towards them; the object of this part of my invention being to reduce the lumber operated upon to a uniformity of thickness, and to give it a planed and even surface upon one side thereof.

The second part of my invention relates to the combination, with feeding-rollers and rotary cutters, for planing one of the principal surfaces of the lumber, of rotary machine cutters so as to form a tongue or groove, or both, upon the edge or edges of the lumber, at the same time that one of its principal surfaces is planed.

In the drawing, A is the frame of the machine, which frame should be substantially constructed to resist the vibrations of the operating parts. B is the driving pulley, which is hung on the main shaft C of the machine, from which latter motion is communicated to the operating parts. D is the shaft of the rotary cutters by which the lumber is planed. This shaft is made flat upon two of its sides, between its bearings, for the reception of the cutters E, E, which are firmly secured to it by bolts *a a*, the holes through these cutters for the reception of these bolts elongated in the direction of the width of the cutters to allow the necessary adjustment of the cutters. The shaft D is hung in adjustable bearings, by which it may be elevated and depressed to regulate the thickness of the planed lumber. F is a pully on the shaft D, which receives motion from belt G, from the band-wheel H, on the driving shaft. I I J J are the feeding rollers, each pair of which is connected by figer pinions *b b*, and the upper roller of each pair is hung in spring bearings, which allow it to yield slightly upward to pressure, to adapt it to any differences or inequalities in the thickness of the lumber. The lower roller of each pair is provided with a worm wheel *c*, which meshes into a worm or endless screw *d* on the shaft *k*, which is propelled by a bevel wheel *l* on the main shaft, working into the bevel wheel *f* on the shank *k*.

L M are cutters hung upon vertical shafts N O, one set of these cutters being adapted to form a groove, and the other to form a tongue upon the

dge of the board to be operated upon. These cutters are attached to the shafts in the manner already described with relation to the cutters E E.

The shafts N O are provided with pulleys *g g*, and rotation is communicated to them by belts *h h*, from pulleys *i i* on the main shaft; rotation being given in the direction of the arrow to the driving pulley.

The lumber to be planed is introduced from the end of the machine, which is shown at the right hand in figures 1 and 2, and being grasped by the rollers I I, is by them drawn forward to the cutters E E, which being rapidly revolved towards the advancing lumber, plane it to the proper thickness; and as the lumber continues to advance it is grasped by the rollers J J, which aid in the feeding motion, and discharges the board after it has passed the cutters. The upper rollers I J, being hung in spring bearings, always exert a pressure on the top of the board, and thus prevent it being raised up by the action of the cutters E E.

When the lumber is designed for floors or ceilings, or other purposes for which it is required to be matched, a tongue is formed on one edge of it and a groove on the other, by the cutters L M, which both revolve toward the advancing board; and these operations are performed at the same time that the upper surface of the board is planed, the whole being done at a single operation.

When the lumber is required to be matched, it should be first reduced to a uniform width, and guided in its introduction into the machine by a gauge P attached to the bed Q of the machine.

When the lumber is not to be matched, this gauge and the cutters L M should be taken off and dispensed with.

I make no claim to the mode in which the cutters are secured upon their shaft, nor to the adjustable bearings which permit of the elevation or depression of the shaft, for I am aware that these are not new; but what I claim as my invention and desire to secure by Patent, is:

1. The combination of the cutters E E and the feeding-rollers I I J J, substantially as and for the purpose hereinbefore set forth.

2. The combination, with the cutters E E and the feeding-rollers I I J J, of the cutters L M, substantially as and for the purpose hereinbefore set forth.

WILLIAM WOODWORTH.

POUGHKEEPSIE, 1st September, 1882.

Signed in the presence of
JETHRO WOOD,
OLIVER EVANS,

14. Drawings.

(*To be in duplicate.*)

Each sheet on tracing linen shall contain the following: The title of the invention on the top of the sheet; the following certificate at the bottom: "Certified to be the drawings referred to in the specification hereunto annexed," and signed by the inventor or his attorney: place, date and signatures of two witnesses.

15. For an art or process.

To all whom it may concern:

Be it known that we, Marion Ellsworth, of Chicago, County of Cook, and State of Illinois, gentleman, and Joseph Richard Shaw, of Indianapolis, County of Marion, and State of Indiana, gentleman, have jointly invented a new and useful improvement in the art or process of separating smut and other impurities from wheat, and we do hereby declare that the following is a full, clear and exact description of the same:

Take of lime, newly slacked and while yet warm, one and a half pound to each one hundred pounds of wheat. Mix the lime well with the wheat, let it stand one hour, then pass it through a smut mill in the usual way, and it will be found that all the lime, smut, dirt and other impurities attached to the wheat, of every kind, and which no smut mill without our liming process, will fully separate, will be entirely removed, and the flour will be as white and as sweet as though made from the best of wheat.

We are aware that lime has before been used for the purpose of cleaning wheat, being first mixed with the grain as above proposed and the whole being then passed through a smut mill; but in all previous processes, so far as we are aware, the lime has been used in a cold state, and for this reason such processes prove ineffectual. We propose to take lime *newly slacked, and while yet warm.*

What we claim as our invention, and desire to secure by Patent, is: the process of cleaning wheat by mixing with it lime newly slacked and warm before passing it through a smut mill, so as to cleanse the wheat from all impurities, substantially as described.

MARION ELLSWORTH.
JOSEPH R. SHAW.

Chicago, 1st September, 1882.

Signed in the presence of
Maurice Jones.
Henry Elias.

16. For a composition of matters.

To all to whom it may concern:

Be it known that I, Ebenezer Whitney, of the City of Charleston, in the district of Charleston and State of South Carolina, gentleman, am the administrator of the estate of Benjamin Browning, in his lifetime of the said city, gentleman, and that the said Benjamin Browning did invent a certain new and useful composition of matter to be used in the manufacture of wool; and I do hereby declare that the following is a full, clear and exact description of the same:

The nature of the invention of the said Benjamin Browning consists of mixing olive, lard or rape-seed oil, with a solution of oil soap dissolved in hot water.

To prepare the wool oil, take a quantity of oil soap of any kind, provided the quality is good, and dissolve the same in hot water, say about thirty pounds of oil soap in thirty gallons of water, or a sufficient quantity of soap to saturate the water. Then take equal parts, by measure of olive, lard, rape-seed, or any other kind of oil which can be used on wool in the process of its manufacture, and mix it with the preparation, aforesaid, to wit: the soap solution, which, after such mixture, is ready to be used on wool with as beneficial an effect as if pure oil only had been used. This wool oil will not decompose by age, because the oil of soap neutralises the stearine in the oil, hence there is nothing to decompose. And for the same reason spontaneous combustion cannot be produced.

What I claim as the invention of the said Benjamin Browning, and desire to secure by patent is: a compound composed of any of the oils ordinarily used on wool in its manufacture, and a solution of oil soap, substantially in the proportions and for the purposes set forth.

EBENEZER WHITNEY,
Administrator.

Charleston, 1st September, 1882.

Signed in presence of
John James,
Henry Smith,

OATHS.

NOTE.—Where oaths are made out of Canada, and before a judge, the Seal of the Court, presided over by such judge, should be affixed, and if before a notary public, his seal should be affixed to such oaths.

17. BY SOLE INVENTOR FOR HIMSELF, OR FOR HIMSELF AND ASSIGNEE, OR FOR ASSIGNEE ONLY.

CANADA,
PROVINCE OF ONTARIO,
County of York.

I, John Smith, of the City of Toronto, in the County of York, in the Province of Ontario, carpenter, make oath and say, that I verily believe that I am the inventor of the new and useful improvements in machines for breaking stone, described and claimed in the annexed specification in duplicate, and for which I (or I and Edwin Morrison) solicit (or James Goodwin solicits) a Patent by my (or our or his) petition, dated 1st September, 1882. And I further say that the several allegations contained in the said petition are respectively true and correct.

JOHN SMITH.

Sworn before me, at the City of Toronto, this first day of September, 1882.

THOMAS BROWN,
J. P. for the County of York.

NOTE.—Persons administering oaths should initial all papers attached.

18. JOINT INVENTORS.

CANADA,
PROVINCE OF ONTARIO,
County of Carleton,
TO WIT:

We, James Thomas, of the City of Ottawa, in the County of Carleton, in the Province of Ontario, in the Dominion of Canada, blacksmith, and George Robert Major, of the same place, tinsmith, do hereby severally make oath and say, and

1st. I, this deponent, James Thomas, for myself do hereby make oath and say that I verily believe that I and the said George Robert Major are the inventors of the new and useful improvement in the art or process of separating smut from wheat, described and claimed in the annexed specification in duplicate, for which we solicit a Patent by our Petition to the Commissioner of Patents, dated 1st September, 1882. And I further say that the several allegations contained in the said petition are respectively true and correct.

And 2nd. I, this deponent, George Robert Major, for myself do hereby make oath and say that I verily believe that I and the above named James Thomas are the inventors of the new and useful improvement in the art or process of separating smut from wheat, described and claimed in the annexed specification in duplicate, for which we solicit a Patent by our petition to the Commissioner of Patents, dated 1st September, 1882. And I further say that the several allegations contained in the said petitions are respectively true and correct.

JAMES THOMAS.
GEORGE ROBERT MAJOR.

Sworn before me, by the said James Thomas and George Robert Major, this first day of September, 1882, at the City of Ottawa.

JOHN SMITH,
J. P. for the County of Carleton.

19. When the invention has been assigned before the issue of Patent the affidavit must be made by the "inventor," not by the "assignee."

20. If the inventor is dead, the administrator or executor will make the affidavit that the person named as inventor was the inventor.

21. FOR A RE-ISSUE (INVENTOR.)

CANADA,
PROVINCE OF ONTARIO,
County of Carleton.

I, Thomas Brown, of the City of Ottawa, in the Province of Ontario, lumber manufacturer,

Make oath and say that the several allegations contained in my petition to the Commissioner of Patents, dated 1st September, 1882, for a re-issue of the Patent granted to me on the 4th September, 1881, for a new and useful improvement in churns are respectively true and correct.

That I am the sole owner of the said Patent.

And that I am the inventor of the improvement set forth and claimed in the amended specification in duplicate hereunto annexed.

THOMAS BROWN.

Sworn before me, at the City of Ottawa, in the County of Carleton, in the Province of Ontario, this first day of September, 1882.

WILLIAM MILLS,
J. P. for the County of Carleton.

If the Patent has not been exclusively assigned, the affidavit must state that the application for re-issue is made with the consent of all the assignees.

22. For a re-issue (assignee of the entire interest.)

CANADA,
Province of Ontario,
County of Carleton.

I, David Lane, of the Town of Cobourg, in the County of Northumberland, Province of Ontario, tanner, make oath and say that the several allegations contained in my petition to the Commissioner of Patents, dated 1st September, 1882, for a re-issue of the Patent granted to Thomas Tardy, of the City of Ottawa, Province of Ontario, broom maker, for new and useful improvements in planing machines, are respectively true and correct.

That I am the sole owner of the said Patent.

And that Thomas Tardy was the inventor of the improvements set forth and claimed in the amended specification in duplicate hereunto annexed.

DAVID LANE.

Sworn before me, at the Town of Cobourg, in the County of Northumberland, Province of Ontario, this first day of September, 1882.

Thomas Parsons,

J. P. for the County of Northumberland.

23. Caveat.

To the Commissioner of Patents, Ottawa:

The undersigned, James Thompson, of the Village of New Edinburgh, in the County of Russell, in the Province of Ontario, school teacher, an intending applicant for a Patent, who has made certain new and useful improvements in locomotive engines, and has not perfected his invention, prays that this specification may be filed as a *Caveat* in the Patent Office, (here describe the invention as far as possible, and refer to letters in drawing, as in specification given before. Form No. 13.)

JAMES THOMPSON.

CANADA,
Province of Ontario,
County of Russell.

I, James Thompson, of the Village of New Edinburgh, in the County of Russell, Province of Ontario, school teacher, make oath and say that I am the inventor of the invention described in the foregoing specification, and that the allegations contained therein are respectively true and correct.

JAMES THOMPSON.

Sworn before me, at New Edinburgh, the first day of September, 1882.
Alexander Bush,
J. P. for the County of Russell.

ASSIGNMENTS.

24. Of an entire interest (or an undivided one half interest) in an invention before the issues of patent.

In consideration of the sum of ten dollars, to me paid by Solomon Lang of the City of Montreal, I do hereby sell and assign to the said Solomon Lang all (or an undivided half of all) my right, title and interest in and to my invention for new and useful improvements in planing machines, as fully set forth and described in the specification which I have signed preparatory to obtaining a Patent. And I do hereby authorize and request the Commissioner of Patents, to issue the said Patent to the said Solomon Lang (or jointly to myself and the said Solomon Lang) in accordance with this assignment.

Witness my hand and seal this first day of September, 1882, at the City of Montreal.

THOMAS LORD [L.S.]

25. Of an entire interest in a patent.

In consideration of five hundred dollars, to me paid by Nathan Wilcox, of Keokuk, Iowa, I do hereby sell and assign to the said Nathan Wilcox, all my right, title and interest in and to the Patent of Canada, No. 23,460, for an improvement in locomotive head lights, granted to me July 30, 1878, the same to be held by and enjoyed by the said Nathan Wilcox to the full end of the term for which said Patent is granted, as fully and entirely as the same could have been held and enjoyed by me if this assignment and sale had not been made.

Witness my hand and seal this first day of September, 1882, at Keokuk, Iowa.

HORACE KIMBALL, [L.S.]

26. Disclaimer.

(*To be in duplicate.*)

I, William Lookup, of the Village of Hull, in the County of Ottawa, Province of Quebec, having on the 1st September, 1882, obtained a Patent for the Dominion of Canada, for new and useful improvements in Waggon Brakes.

And through mistake, accident or inadvertence, without any wilful intent to defraud or mislead the public, I have made the claim in my specification too broad (or as being the inventor of a material or substantial part of the invention patented of which I was not the inventor, and to which I had no legal right.)

I, therefore, hereby disclaim the part of the claim in the specification, which is in the following words:

"I also claim the use of the Lever A, in combination with Crank D, as described."

WILLIAM LOOKUP.

Hull, 30th September, 1882.

Signed in duplicate in the presence of
David Brown,
Francis Lemieux.

Nathan Wilcox,
Nathan Wilcox,
ada, No. 23,460,
o me July 30,
han Wilcox to
l, as fully and
by me if this

2, at Keokuk,

LL, [L.S.]

of Ottawa,
ned a Patent
s in Waggon

any wilful
laim in my
l or substan-
ventor, and

pecification,

rank D, as

OOKUP.

for the certificate of payment of fee for further term (inventor)..... 5
" " " (assignee)..... 10

(TITLE OF INVENTION.)

FIG. 1.

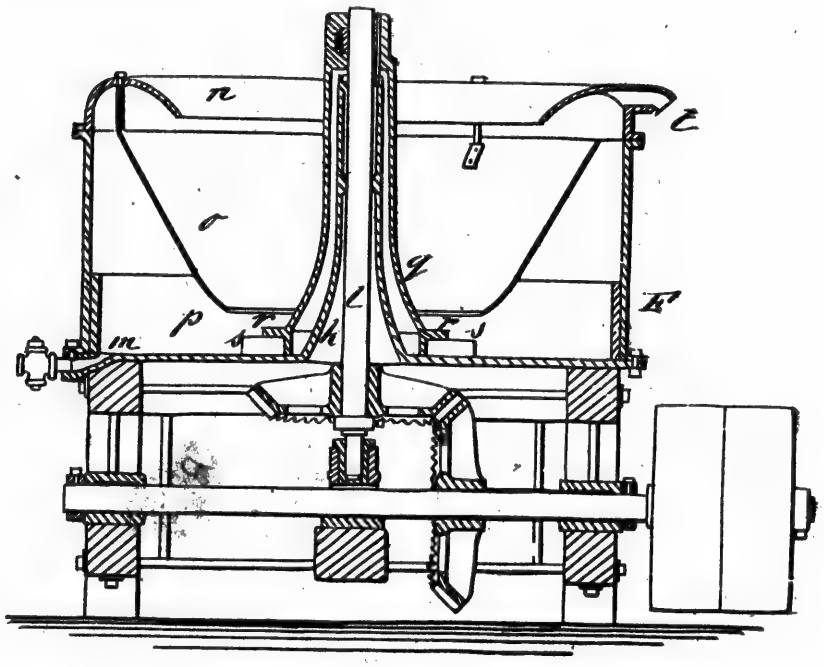

FIG. 2.

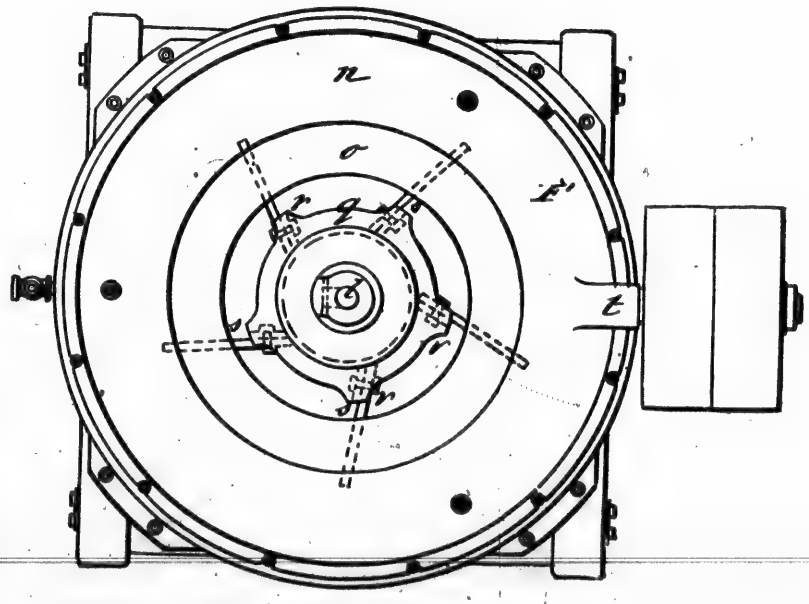

Certified to be the Drawings referred to in the specification hereunto annexed.

(Place and date.)

(Signatures of two witnesses.) (Signature of Inventor or his Attorney.)

No nee
Applica
Corresp
Docume
Commu
Papers
Models,
Fees, ho
Applica
Two inv
Protest
Caveats,
Drawing
Re-issue
Pending
Inquirie
Business
Assignm
Proceedi

Correspo
Separate
Papers sh
Caveats s
Papers pr
Copy of ru

Petition, b
" b
" b
" b
" b
" fo
"
" (a
" fo
"

TABLE OF CONTENTS.

RULES.

	RULE.
No necessity for personal appearance	1
Applicant responsible for his allegations	2
Correspondence carried on with one person only	3
Documents to be on foolscap paper, and legibly written	4
Communications to be addressed to the Commissioner of Patents, Ottawa	5
Papers not conformable to law will be returned	6
Models, size, &c	7
Fees, how paid	8
Applications to be proceeded with within two years	9
Two inventions cannot be claimed in one application	10
Protest against the granting of Patent not sufficient to prevent its issue	11
Caveats, of what composed	12
Drawings, how executed, and size of sheets	13
Re-issue of Patents	14
Pending cases, and information relating thereto	15
Inquiries as to articles being patentable	16
Business should be transacted in writing	17
Assignment, registration of	18
Proceedings not specially provided for	19

NOTICES.

Correspondence free of postage in Canada	1
Separate letters for each distinct subject	2
Papers should be prepared by competent persons	3
Caveats should have drawings	4
Papers properly executed, hastens despatch of business	5
Copy of rules, with sections marked, intended as an answer	6

FORMS.

	FORM.
Petition, by a sole inventor	1
" by joint inventors	2
" by assignee or legatee	3
" by inventor for himself and assignee	4
" by administrator or executor	5
" for a re-issue (by the inventor)	6
" " (by the assignee)	7
" (surrender)	8
" for the Certificate of payment of fee for further term (inventor)	9
" " " (assignee)	10

FORM.

Power of Attorney 11
" revocation of 12
Specification for a machine 13
Drawings 14
Specification for an art or process 15
for a composition of matter 16
Oaths, by sole inventor 17
" by joint inventors 18
" by inventor, when invention has been assigned 19
" by administrator or executor 20
" by applicant for re-issue (inventor) 21
" (assignee) 22
Caveat 23
Assignment, before issue of Patent 24
" of Patent 25
Disclaimer 26

FORM.
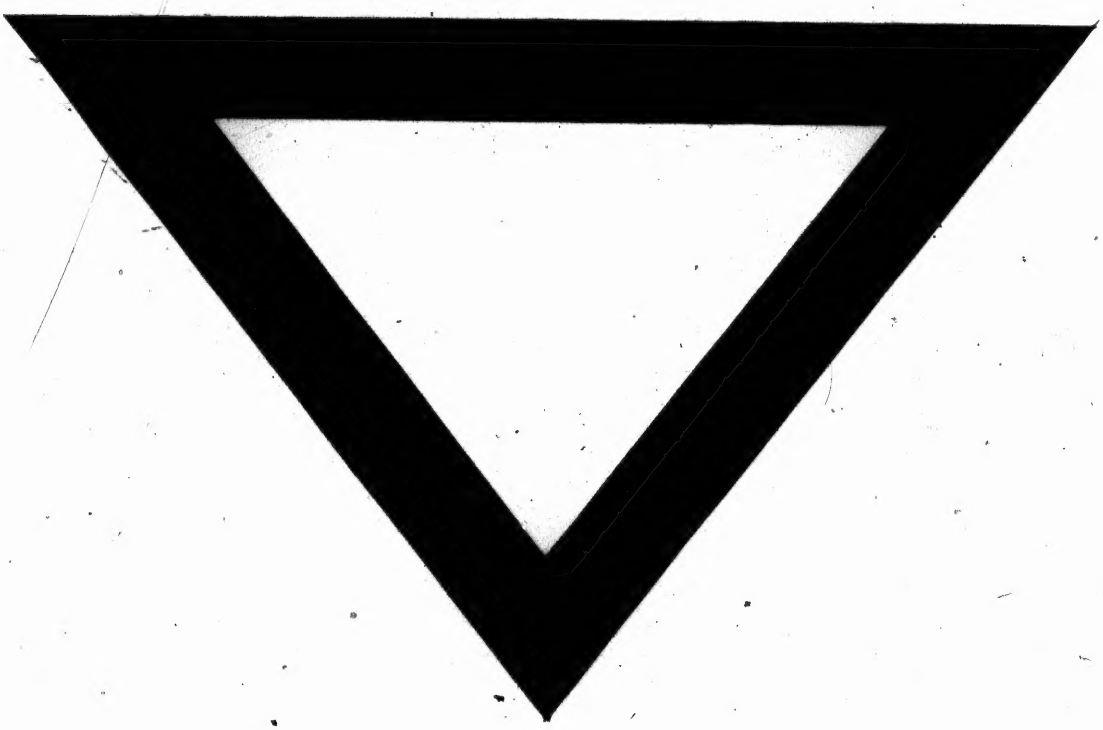
..... 11
..... 12
..... 13
..... 14
..... 15
..... 16
..... 17
..... 18
..... 19
..... 20
..... 21
..... 22
..... 23
..... 24
..... 25
..... 26